CS-3D-16 SIMPLICITY TRIPLE COMBO BOWL BUBBLER



RefCCCRFG
(CCCRFG)

Simplicity Bubbler Triple Tall Base CS-3D-16, BPA-Free Locking Lid, (1), 4.75 gallon, (18 L) bowl, and (2), 2.4 gallon (9 L) bowls - Refrigerant R290

General Features

CS-3D-16 Premix dispenser with stainless steel base. Model with BPA-Free bowl. Dispenses three flavors with (1), 4.75 gallon, (18 L) bowl, and (2), 2.4 gallon (9 L) bowls. Agitation model for fresh juices, coffees or teas with minimal foaming system. Unique to Simplicity, the air intakes from the bottom and exhausts to back. This efficient cooling uses less energy and saves money. Compact size of 10.5 inches (25 cm) wide saves valuable counterspace. Heavy product Dispense Valve standard on Simplicity Bubblers, perfect for lemonades and horchatas. Interchangeable bowls. New easy-off bowl release system means no more reaching into the bowl. Makes cleaning easier and reduces labor. Locking lid provides enhanced safety for operators. 9” (22.9 cm) cup clearance for a variety of drinks. Dispenses product to the very last drop. Fewer removable parts to simplify cleaning and reduce maintenance. Temperature ranges from 35 - 41° F (1.7 -5° C). e parts to simplify cleaning and reduce maintenance. Temperature ranges from 35 - 41° F (1.7 -5° C). R290 refrigerant.

CS-3D-16 SIMPLICITY TRIPLE COMBO BOWL BUBBLER

Specifications

- Agitation function for fresh juices, coffees, or teas with minimal foaming system.
- Easy-off bowl release system for faster and easier assembly and disassembly.
- User friendly design enables machine to dispense product till the very last drop.
- BPA-Free Bowl, Polycarbonate Bowl Available

Construction

- Refrigerant type: R290.
- Pre-mix dispenser with stainless steel base and clear plastic bowls.
- Fewer removable parts to simplify cleaning and reduce maintenance.
- The air intakes from the bottom and exhaust to back.
- Locking lid for added safety against tampering.
- Versatile slush machine with three (3) 2.9 gallon/11L I-Tank insulated bowls
- Temperature ranges from 35 - 41° F (1.7 -5° C)
- Compact size of 21 inches (52 cm) wide saves valuable counterspace

CS-3D-16 SIMPLICITY TRIPLE COMBO BOWL BUBBLER

Electric

Supply voltage:	120 V / 1N ph / 60 Hz
Electrical power max.:	0.4 kW
Current consumption:	3.5 Amps
Plug type:	NEMA 5-15

Key Information:

Number of bowls:	3
Control board:	Mechanical
Bowl's capacity:	4.8 gal
Dimensions, Width:	20 1/2"
Dimensions, Depth:	18 1/2"
Dimensions, Height:	27 9/16"
Net weight:	92 lb

Refrigeration Data

Refrigerant gas:	R290

Certifications

Front

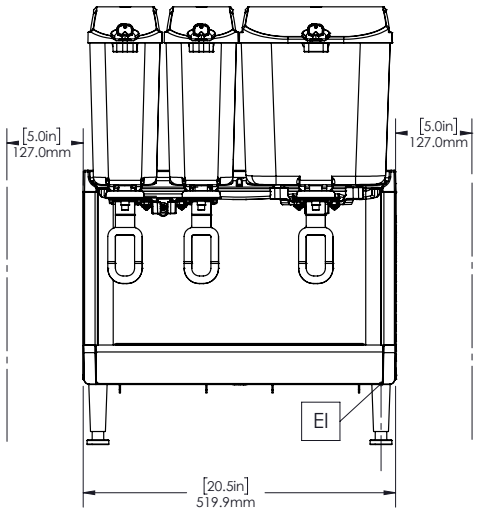

Side

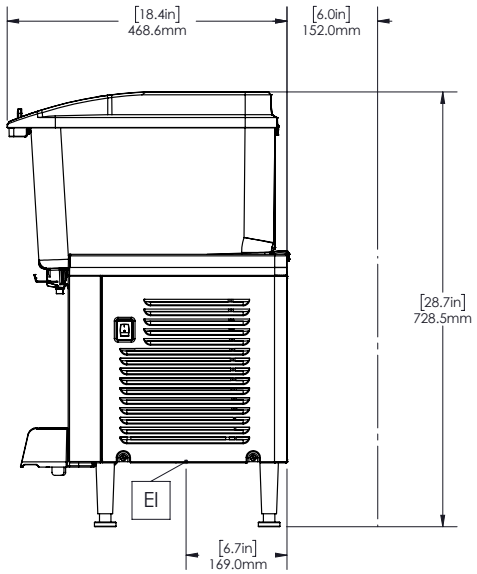

Top

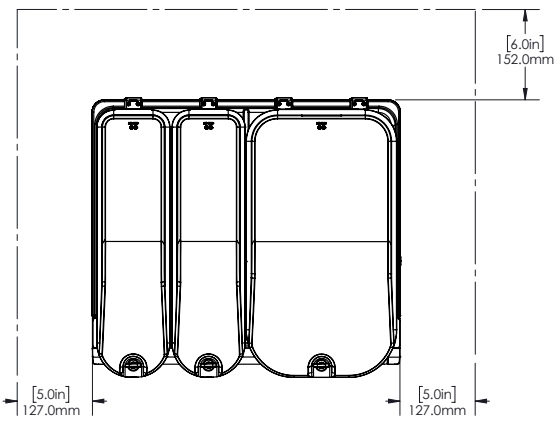

The company reserves the right to make modifications to the products without prior notice. All information correct at time of printing.

2026.11.20

CRATHCO
www.crathco.drink-systems.com
infocrathco@electroluxprofessional.com